MADISON Showerpipe with shower thermostat - Platinum

ST 050 304 4360

- shower with fixed riser projection 420mm
- rain shower Ø 200 mm
- rain shower with anti-scale system
- max. rainshower flow 14 l/min
- Function from: 8 l/min
- rotary diverter for fixed-riser shower/hand shower
- height of fittings up to rain shower (bottom edge) 985mm
- height of fittings up to top edge of elbow 1160mm
- two-part push-on rosette Ø 65 mm
- rosette for shower holder Ø 65mm
- rosette for wall mounting Ø 60mm
- gauge 150 mm - 13 mm
- metal shower hose 1250mm with integrated anti-twist protection
- 1/2" connection
- Pipe diameter 20 mm

Platinum	ST 050 304 4360-08
Chrome	ST 050 304 4360-00
Brushed Platinum	ST 050 304 4360-06
Durabrass (23kt Gold)	ST 050 304 4360-09
Brushed Durabrass (23kt Gold)	ST 050 304 4360-28
Brushed Dark Platinum	ST 050 304 4360-99

Individual components of this set

You need the following components for this set

1x 11 420 360-08

1x 34 459 360-08

ST 050 304 4360

MADISON Showerpipe with shower thermostat - Platinum

ST 050 304 4360

Platinum	11 420 360-08
Chrome	11 420 360-00
Brushed Platinum	11 420 360-06
Durabrass (23kt Gold)	11 420 360-09
Brushed Durabrass (23kt Gold)	11 420 360-28
Brushed Dark Platinum	11 420 360-99

We reserve the right to change designs, product range and technical specifications without prior notice.
More information can be found at: www.dornbracht.com +49 (0) 2371 8899 900 mail@dornbracht.com

ST 050 304 4360

ST 050 304 4360

MADISON Showerpipe with shower thermostat - Platinum

ST 050 304 4360

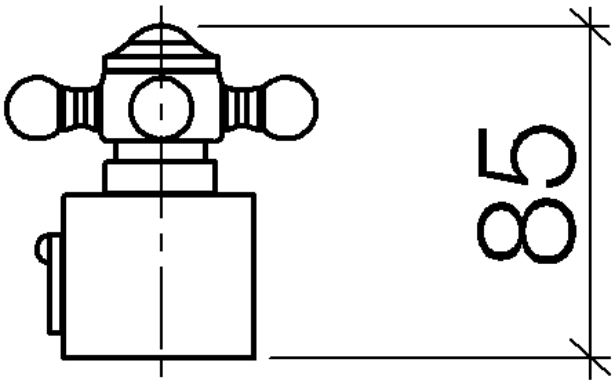

MADISON Showerpipe with shower thermostat - Platinum

ST 050 304 4360

Parts for other finishes can be found here: Chrome

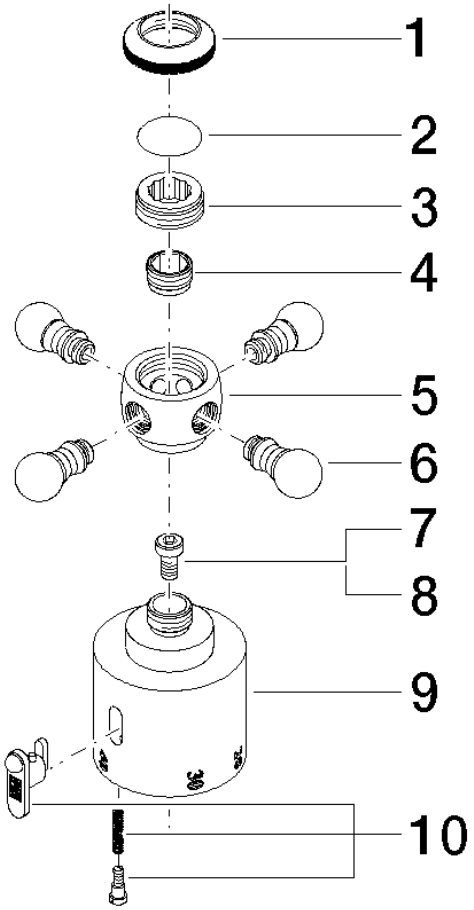

Spare parts list

No.	Item Number	Name	Quantity used	Delivery time
1	09 20 36 005-08	handle	1	40
2	09 26 01 016 90	accessories	1	2
3	09 20 83 006 90	handle	1	2
4	09 24 03 119 90	nipple	1	2
6	09 20 36 004-08	handle	4	40
7	90 30 30 027 00 90	screw	1	2
8	09 30 33 004 90	screw	1	2
10	90 21 33 020 00 90	handle	1	2

We reserve the right to change designs, product range and technical specifications without prior notice.
More information can be found at: www.dornbracht.com +49 (0) 2371 8899 900 mail@dornbracht.com

MADISON Showerpipe with shower thermostat - Platinum

ST 050 304 4360

- shower with fixed riser projection 420mm
- rain shower Ø 200 mm
- rain shower with anti-scale system
- max. rainshower flow 14 l/min
- Function from: 8 l/min
- rotary diverter for fixed-riser shower/hand shower
- height of fittings up to rain shower (bottom edge) 985mm
- height of fittings up to top edge of elbow 1160mm
- two-part push-on rosette Ø 65 mm
- rosette for shower holder Ø 65mm
- rosette for wall mounting Ø 60mm
- gauge 150 mm - 13 mm
- metal shower hose 1250mm with integrated anti-twist protection
- 1/2" connection
- Pipe diameter 20 mm

This article does not include a hand shower!

Intrinsic protection against back flow.

NOTE:The handles must be ordered separately from the fittings!

Platinum	34 459 360-08
Chrome	34 459 360-00
Brushed Platinum	34 459 360-06
Durabrass (23kt Gold)	34 459 360-09
Brushed Durabrass (23kt Gold)	34 459 360-28
Brushed Dark Platinum	34 459 360-99

ST 050 304 4360

MADISON Showerpipe with shower thermostat - Platinum

ST 050 304 4360

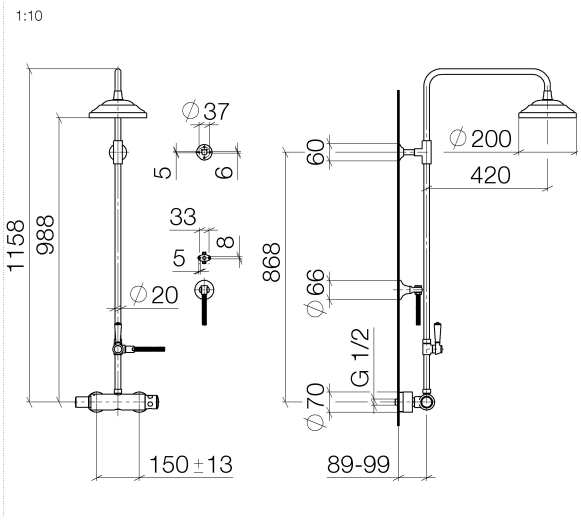

Flow rate chart

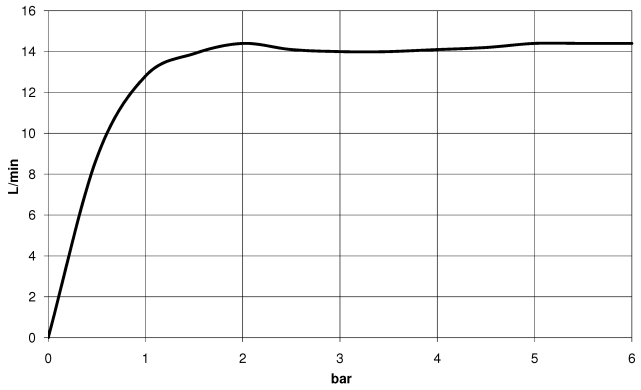

Codes & Standards

DIN 4109	ISO 3822	Ü-Zeichen

Certificates

LGA_38

ST 050 304 4360

MADISON Showerpipe with shower thermostat - Platinum

ST 050 304 4360

Parts for other finishes can be found here: Chrome

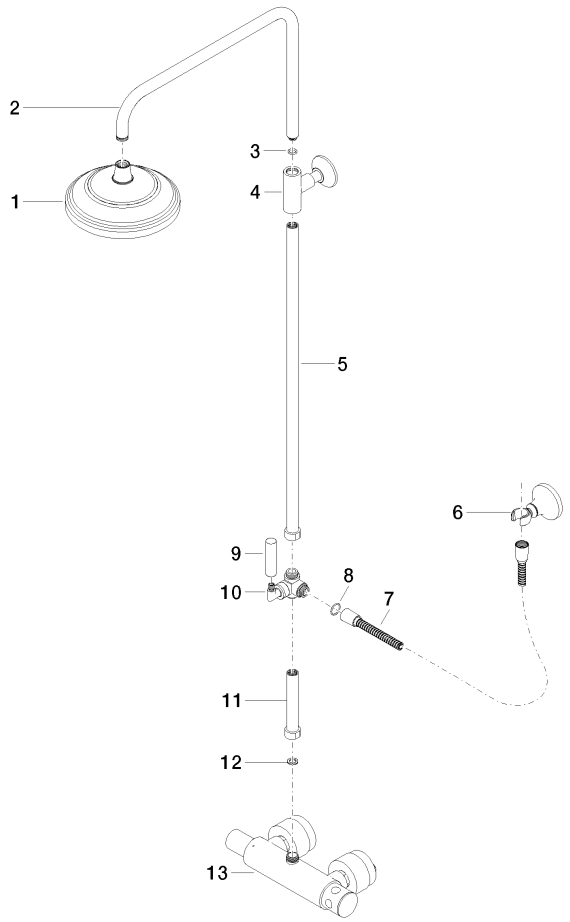

Spare parts list

No.	Item Number	Name	Quantity used	Delivery time
1	04 12 05 038 01-08	shower	1	40
2	04 28 22 101 20-08	spout	1	40
3	90 14 10 011 00 90	seal	1	2
4	90 17 11 037 01-08	holder	1	-
	Spare part can no longer be ordered, please order the replacement item			
5	90 28 22 104 00-08	pipe	1	-
	Spare part can no longer be ordered, please order the replacement item			
6	90 17 09 045 01-08	diverter	1	40
7	09 30 30 064-08	screw	1	40
8	09 18 20 011-08	base	1	40
9	09 28 22 013 90	pipe	1	2
10	11 170 370-08	MADISON Lever insert - Platinum	1	40
11	09 30 30 062-08	screw	1	40
12	09 14 10 122 90	seal	1	2
13	28 104 970-08	Metal shower hose 1/2" x 1/2" x 1250 mm - Platinum	1	40
14	28 050 410-08	holder	1	60
15	90 28 22 103 00-08	pipe	1	-
	Spare part can no longer be ordered, please order the replacement item			
16	90 14 20 002 00 90	seal	1	2
17	04 17 01 044 01-08	fitting	1	40

We reserve the right to change designs, product range and technical specifications without prior notice.
More information can be found at: www.dornbracht.com +49 (0) 2371 8899 900 mail@dornbracht.com